Cambridge International AS & A Level

Cambridge International Examinations
Cambridge International Advanced Subsidiary and Advanced Level

CANDIDATE NAME

CENTRE NUMBER

CANDIDATE NUMBER

5926418372

PHYSICS **9702/33**

Paper 3 Advanced Practical Skills 1 **October/November 2017**

2 hours

Candidates answer on the Question Paper.

Additional Materials: As listed in the Confidential Instructions.

READ THESE INSTRUCTIONS FIRST

Write your Centre number, candidate number and name on all the work you hand in.
Write in dark blue or black pen.
You may use an HB pencil for any diagrams or graphs.
Do not use staples, paper clips, glue or correction fluid.
DO **NOT** WRITE IN ANY BARCODES.

Answer **both** questions.
You will be allowed to work with the apparatus for a maximum of one hour for each question.
You are expected to record all your observations as soon as these observations are made, and to plan the presentation of the records so that it is not necessary to make a fair copy of them.
You are reminded of the need for good English and clear presentation in your answers.

Electronic calculators may be used.
You may lose marks if you do not show your working or if you do not use appropriate units.

Additional answer paper and graph paper should be used only if it becomes necessary to do so.

At the end of the examination, fasten all your work securely together.
The number of marks is given in brackets [ ] at the end of each question or part question.

For Examiner's Use	
1	
2	
Total	

This document consists of **12** printed pages.

© UCLES 2017

CAMBRIDGE International Examinations

You may not need to use all of the materials provided.

1 In this experiment, you will investigate the rotational motion of a mass.

(a) You have been provided with a 10 g mass hanger and several 10 g slotted masses.

Set up the apparatus as shown in Fig. 1.1.

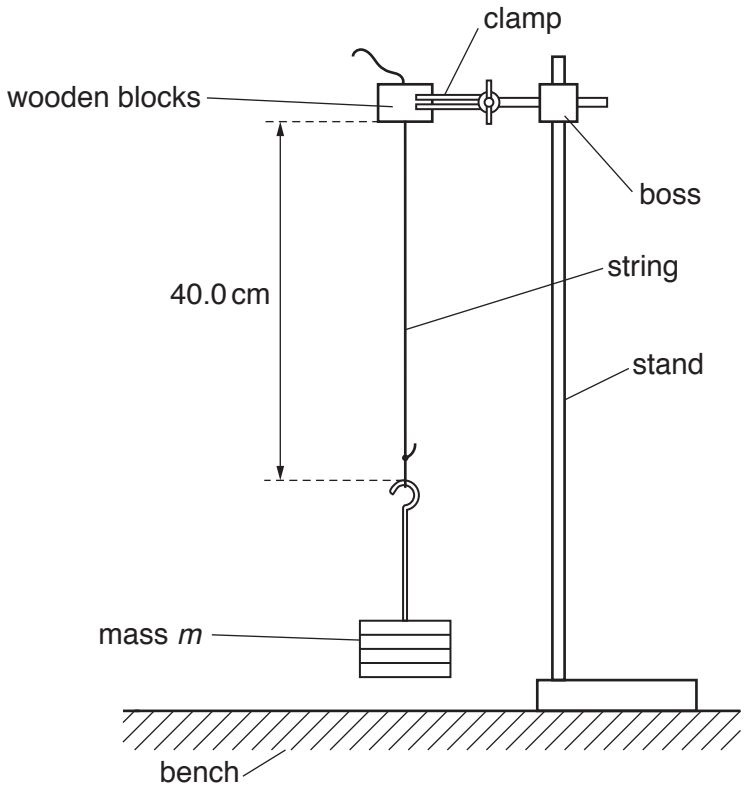

Fig. 1.1

Adjust the string so that the distance between the bottom of the wooden blocks and the top of the mass hanger is 40.0 cm.

The combined mass *m* of the mass hanger and slotted masses must be 70 g.

© UCLES 2017

(b) (i) Twist the mass through **ten** complete turns as shown in Fig. 1.2.

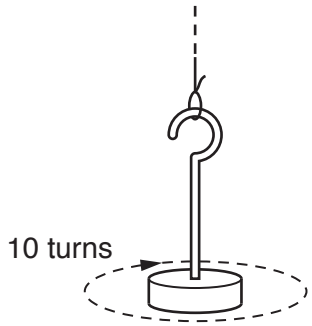

Fig. 1.2

(ii) When the mass is released, it will rotate one way and then rotate the other way. This motion will continue until the mass comes to rest. At this point, the mass will continue to swing slightly with very little rotation.

Release the mass. Measure and record the time *a* taken for the mass to come to rest.

a = ...[1]

(iii) Change the distance between the bottom of the wooden blocks and the top of the mass hanger to 20.0 cm.

(iv) Repeat **(b)(i)**.

Release the mass. Measure and record the time *b* taken for the mass to come to rest.

b = ...[1]

(v) Change the distance between the bottom of the wooden blocks and the top of the mass hanger to 40.0 cm.

© UCLES 2017

[Turn over

(c) Change m and repeat **(b)** until you have six sets of values of m, a and b. You may include your results from **(b)**.

Record your results in a table. Include values of $\frac{a^2}{b}$ in your table.

[10]

(d) **(i)** Plot a graph of $\frac{a^2}{b}$ on the y-axis against m on the x-axis. [3]

(ii) Draw the straight line of best fit. [1]

(iii) Determine the gradient and y-intercept of this line.

gradient = ...

y-intercept = ...

[2]

© UCLES 2017

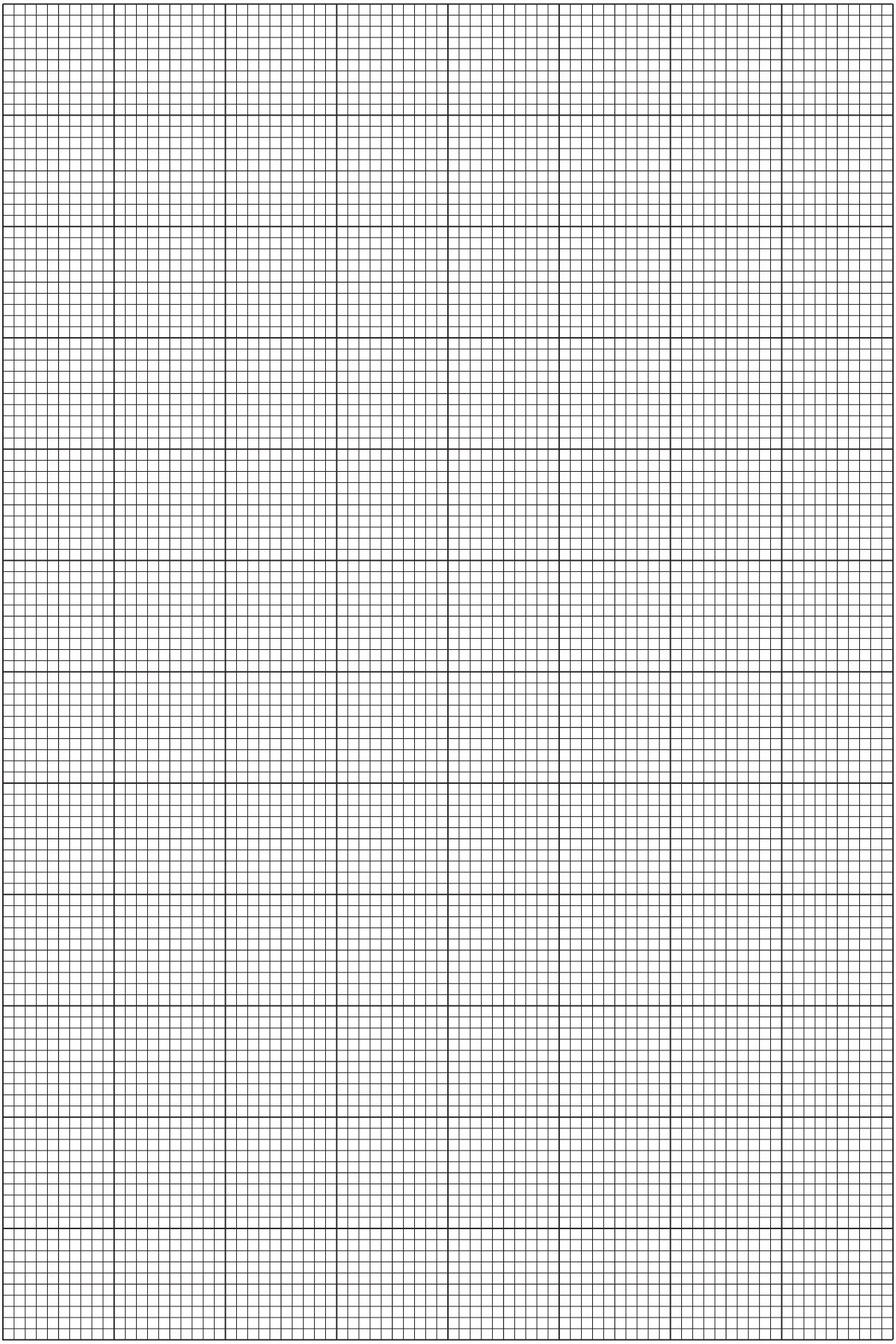

(e) It is suggested that the quantities a, b and m are related by the equation

$$\frac{a^2}{b} = Pm + Q$$

where P and Q are constants.

Using your answers in **(d)(iii)**, determine the values of P and Q.
Give appropriate units.

$P =$ .....

$Q =$ .....
[2]

[Total: 20]

You may not need to use all of the materials provided.

2 In this experiment, you will investigate the equilibrium of a metre rule supported by springs.

(a) (i) Set up the apparatus as shown in Fig. 2.1.

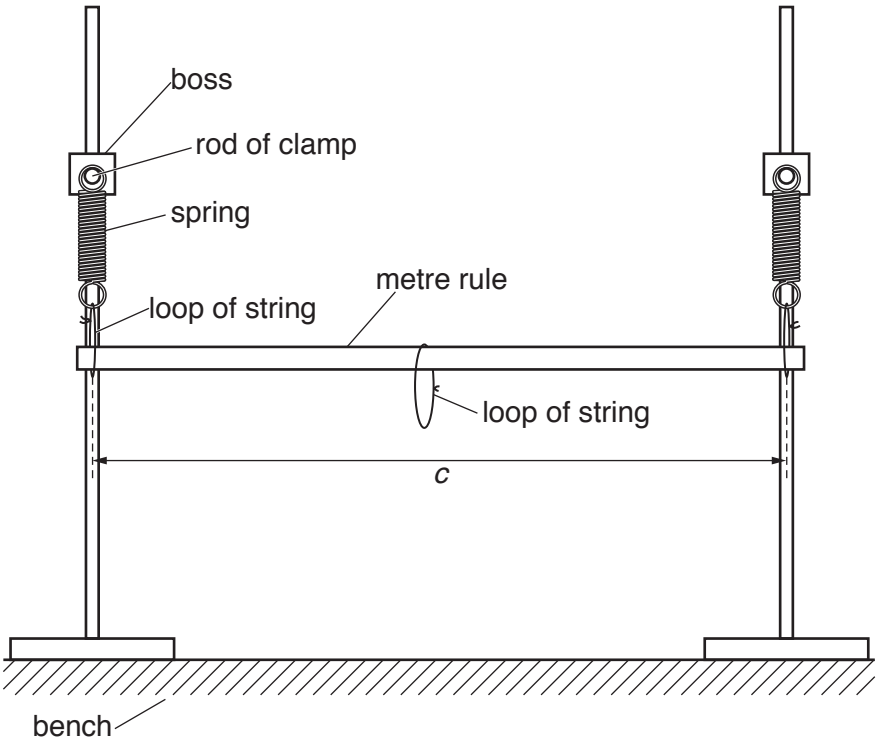

Fig. 2.1

Adjust the position of the bosses until the metre rule is parallel to the bench.

The loops of string supporting the rule should be vertical and as close to the ends of the rule as possible.

The distance between these loops is *c*.

(ii) Measure and record *c*.

c = ... cm [1]

(b) Suspend a mass *m* of 0.100 kg from the loop of string as shown in Fig. 2.2.

The distance between the string loop below boss A and the string loop supporting the mass is *x*.
Move the mass so that *x* is approximately 80 cm.

Adjust the height of boss B until the rule is parallel to the bench as shown in Fig. 2.2.

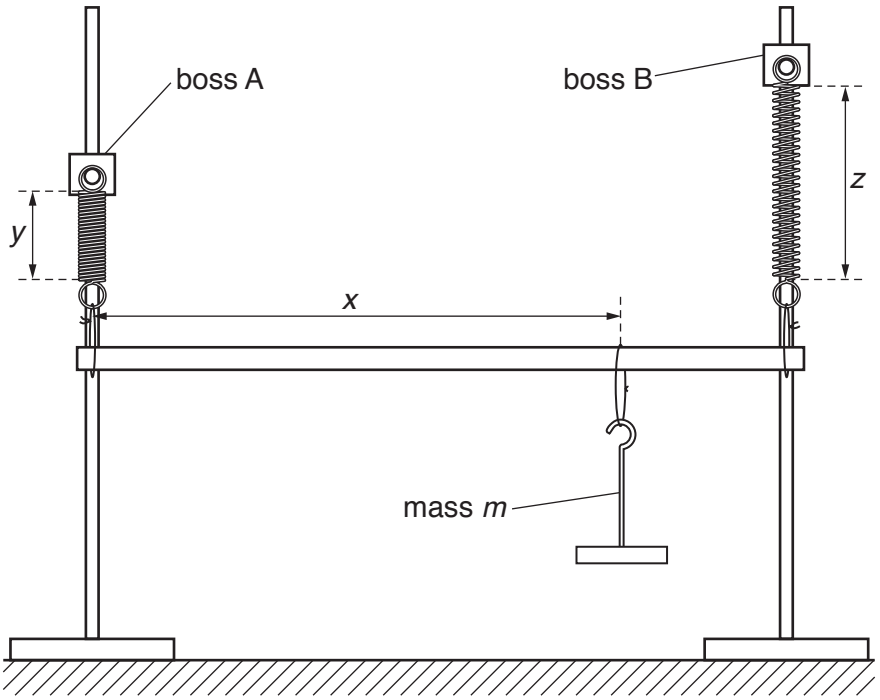

Fig. 2.2

The lengths of the coiled sections of the springs are *y* and *z* as shown in Fig. 2.2.

© UCLES 2017

(c) **(i)** Record m.

m = ... kg

(ii) Measure and record x.

x = ... cm [1]

(iii) Measure and record y.

y = ... cm

(iv) Measure and record z.

z = ... cm [1]

(d) Estimate the percentage uncertainty in your value of z.

percentage uncertainty = ...[1]

(e) **(i)** Calculate $\left(x - \frac{c}{2}\right)$.

$\left(x - \frac{c}{2}\right)$ = ... cm [1]

(ii) Calculate $\frac{(z-y)}{m}$. Give an appropriate unit.

$\frac{(z-y)}{m}$ = ...[1]

(f) Justify the number of significant figures that you have given for your value of $\frac{(z-y)}{m}$.

.....

.....

.....[1]

(g) (i) Change m to 0.200 kg. Adjust the position of the mass and the height of boss B until the value of y is the **same** as in **(c)(iii) and** the metre rule is parallel to the bench.

(ii) Repeat **(c)(i)**, **(c)(ii)**, **(c)(iv)** and **(e)**.

m = ... kg

x = ... cm

z = ... cm

$\left(x - \frac{c}{2}\right)$ = ... cm

$\frac{(z-y)}{m}$ = ...

[3]

© UCLES 2017

(h) It is suggested that the relationship between x, c, z, y and m is

$$\left(x - \frac{c}{2}\right) = \frac{k(z-y)}{m}$$

where k is a constant.

(i) Using your data, calculate two values of k.

first value of k = ...

second value of k = ... [1]

(ii) Explain whether your results support the suggested relationship.

.....

.....

.....

..... [1]

(i) **(i)** Describe four sources of uncertainty or limitations of the procedure for this experiment.

1. .....

.....

2. .....

.....

3. .....

.....

4. .....

.....

[4]

(ii) Describe four improvements that could be made to this experiment. You may suggest the use of other apparatus or different procedures.

1. .....

.....

2. .....

.....

3. .....

.....

4. .....

.....

[4]

[Total: 20]

Permission to reproduce items where third-party owned material protected by copyright is included has been sought and cleared where possible. Every reasonable effort has been made by the publisher (UCLES) to trace copyright holders, but if any items requiring clearance have unwittingly been included, the publisher will be pleased to make amends at the earliest possible opportunity.

To avoid the issue of disclosure of answer-related information to candidates, all copyright acknowledgements are reproduced online in the Cambridge International Examinations Copyright Acknowledgements Booklet. This is produced for each series of examinations and is freely available to download at www.cie.org.uk after the live examination series.

Cambridge International Examinations is part of the Cambridge Assessment Group. Cambridge Assessment is the brand name of University of Cambridge Local Examinations Syndicate (UCLES), which is itself a department of the University of Cambridge.